Alpine Flow Control UK Limited

## Butterfly Valve Torque Settings Chart

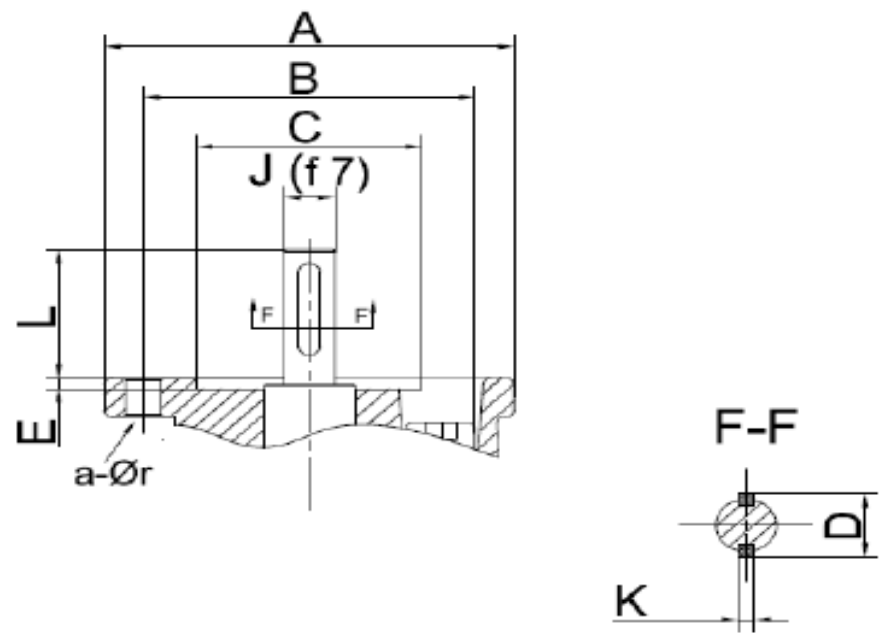


### Butterfly Valve Double Flanged, Series 13 & 14

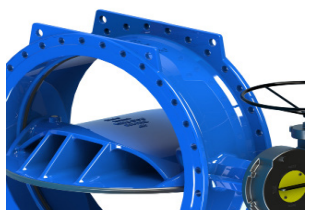
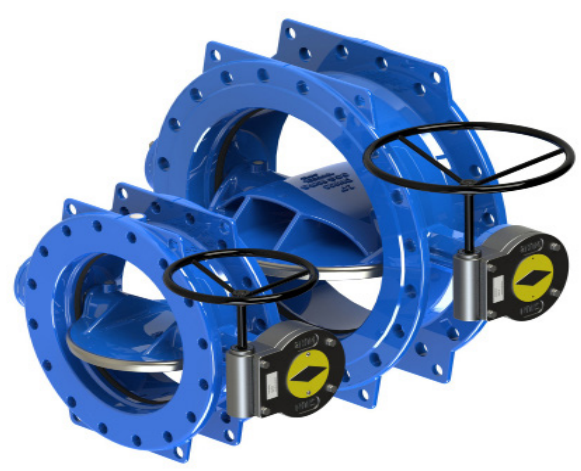
| NO | Product Code | (N. M) | | ISO 5211 | | A | | B | | C | | a-Φr | | a | | E | J | L | D | K |
|---|---|---|---|---|---|---|---|---|---|---|---|---|---|---|---|---|---|---|---|---|
| | | PN10 | PN16 | PN10 | PN16 | PN10 | PN16 | PN10 | PN16 | PN10 | PN16 | PN10 | PN16 | PN10 | PN16 | | | | | |
| 1 | FBBD-0100 | 70 | 85 | F07 | | 90 | | 70 | | 56 | | Φ9 | | 4 | | 4 | 18 | 42 | 23 | 6 |
| 2 | FBBD-0150 | 118 | 128 | F10 | | 125 | | 102 | | 70 | | Φ11 | | 4 | | 5 | 20 | 39 | 25 | 6 |
| 3 | FBBD-0200 | 190 | 210 | F10 | | 125 | | 102 | | 75 | | Φ11 | | 4 | | 5 | 25 | 47 | 31 | 8 |
| 4 | FBBD-0250 | 228 | 250 | F10 | | 125 | | 102 | | 75 | | Φ11 | | 4 | | 5 | 25 | 47 | 31 | 8 |
| 5 | FBBD-0300 | 345 | 372 | F12 | | 150 | | 125 | | 86 | | Φ14 | | 4 | | 5 | 30 | 49 | 36 | 8 |
| 6 | FBBD-0350 | 600 | 760 | F12 | | 150 | | 125 | | 86 | | Φ14 | | 4 | | 5 | 30 | 50 | 36 | 8 |
| 7 | FBBD-0400 | 960 | 1160 | F14 | | 175 | | 140 | | 102 | | Φ17 | | 4 | | 5 | 40 | 54 | 46 | 12 |
| 8 | FBBD-0450 | 972 | 1280 | F14 | | 175 | | 140 | | 102 | | Φ17 | | 4 | | 5 | 40 | 54 | 46 | 12 |
| 9 | FBBD-0500 | 1150 | 1450 | F14 | | 175 | | 140 | | 102 | | Φ17 | | 4 | | 5 | 40 | 54 | 46 | 12 |
| 10 | FBBD-0600 | 1500 | 1800 | F16 | | 210 | | 165 | | 132 | | Φ21 | | 4 | | 5 | 45 | 55 | 52 | 14 |
| 11 | FBBD-0700 | 1944 | 2592 | F16 | | 210 | | 165 | | 132 | | Φ21 | | 4 | | 5 | 60 | 74 | 68 | 18 |
| 12 | FBBD-0800 | 3240 | 4428 | F16 | F25 | 210 | 300 | 165 | 254 | 132 | 202 | Φ21 | Φ18 | 4 | 8 | 5 | 60 | 74 | 68 | 18 |
| 13 | FBBD-0900 | 4100 | 5300 | F25 | | 300 | | 254 | | 202 | | Φ18 | | 8 | | 5 | 80 | 100 | 90 | 22 |
| 14 | FBBD-1000 | 5850 | 7245 | F25 | | 300 | | 254 | | 202 | | Φ18 | | 8 | | 5 | 100 | 110 | 112 | 28 |
| 15 | FBBD-1200 | 8280 | 13320 | F25 | | 300 | | 254 | | 202 | | Φ18 | | 8 | | 5 | 100 | 110 | 112 | 28 |
| 16 | FBBD-1400 | 10800 | 18900 | F30 | | 350 | | 298 | | 232 | | Φ22 | | 8 | | 5 | 120 | 140 | 134 | 32 |
| 17 | FBBD-1600 | 14500 | 26560 | F35 | | 415 | | 356 | | 262 | | Φ32 | | 8 | | 5 | 140 | 175 | 157 | 36 |